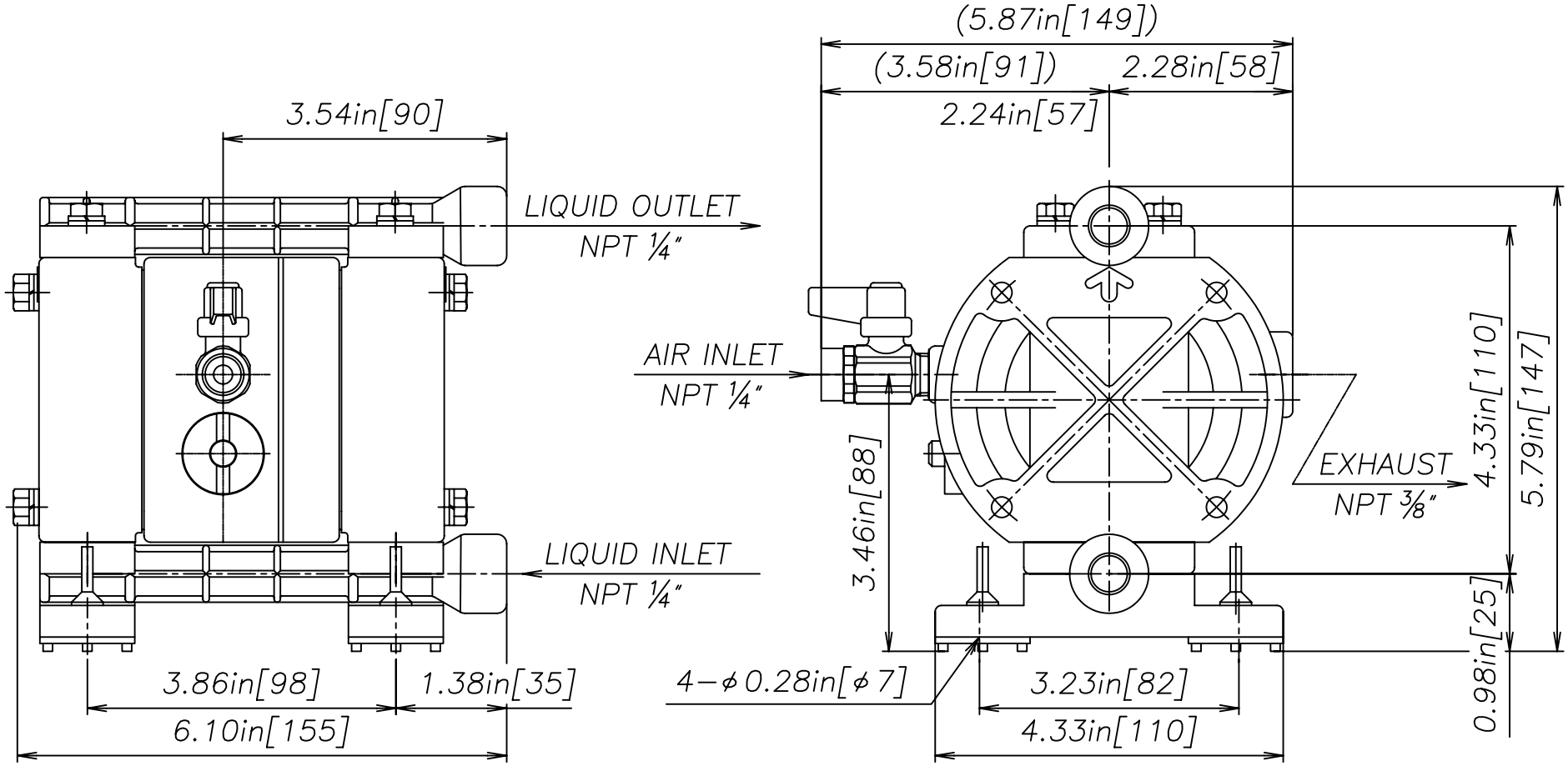

REV	DATE	DESCRIPTION	APPR'D

THE DWG.OF:

DIAPHRAGM PUMP ASSEMBLY

SCALE 1 : 1 DRAWN BY YJI

DATE 02/10/06 APPROVED BY S.K.

THIRD ANG.PROJ.

DRAWING NUMBER: NDP-5FP/FD

REV 0

YAMADA AMERICA, INC.
1200 NUCLEAR DRIVE – WEST CHICAGO, ILLINOIS 60185
TOLL FREE 800-990-7867 OR 630-231-4083

THIS IS A CAD DRAWING AND MUST NOT BE ALTERED MANUALLY.