EXPLODED VIEW & PARTS LISTING

Air Operated Double Diaphragm Pump

Model: NDP-50BAU
Model#: 852231-U

To Purchase:
800-990-7867
sales@yamadapump.com
Find My Rep

More Information:
YouTube: @yamadapump
yamadapump.com
Data Sheets | CAD Drawings | Manuals
Literature | BOM | Performance Curves

Trial Program

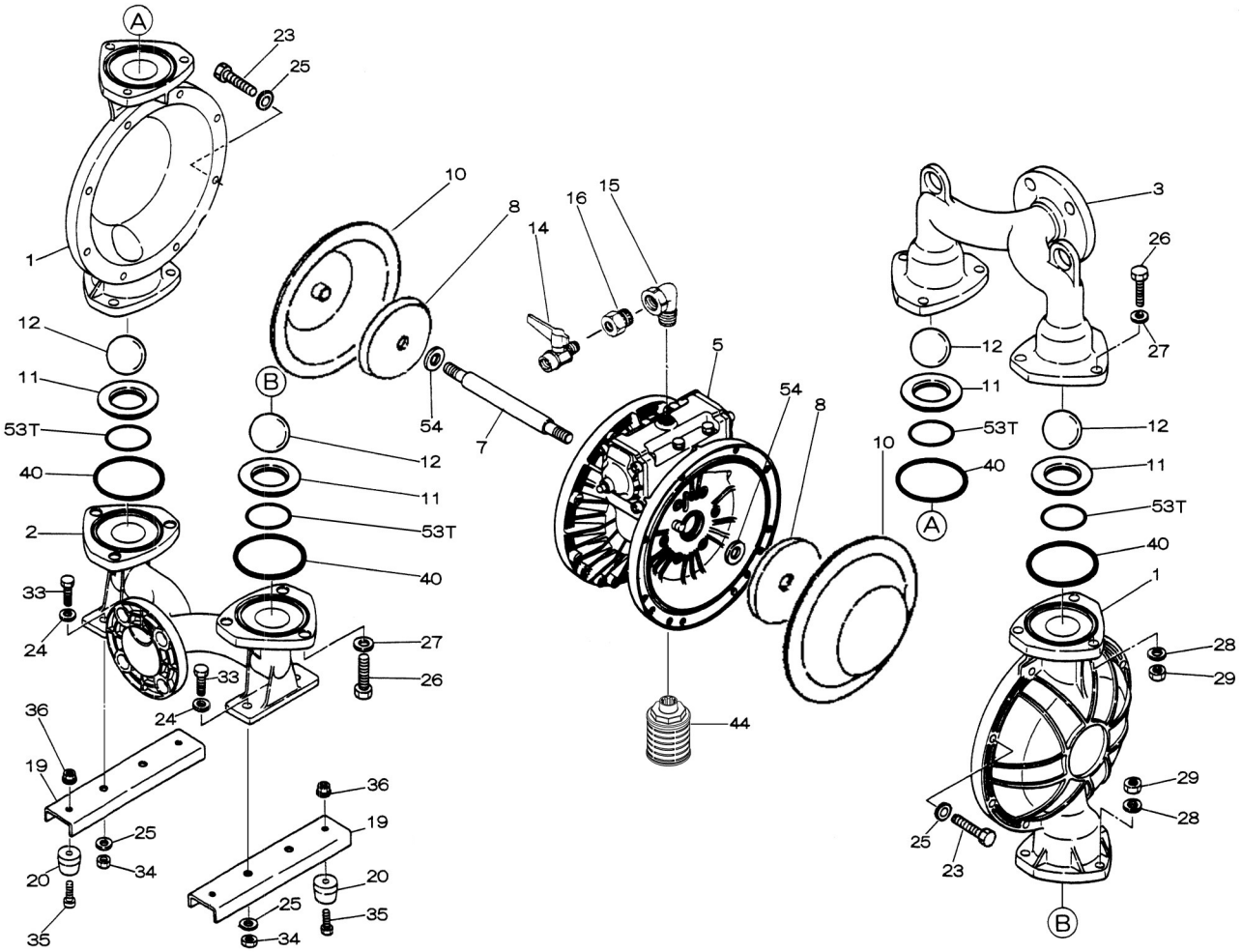

©2023 Yamada America, Inc. PL00-09/23 www.yamadapump.com The Proof's in the Pump®

■Body Assembly

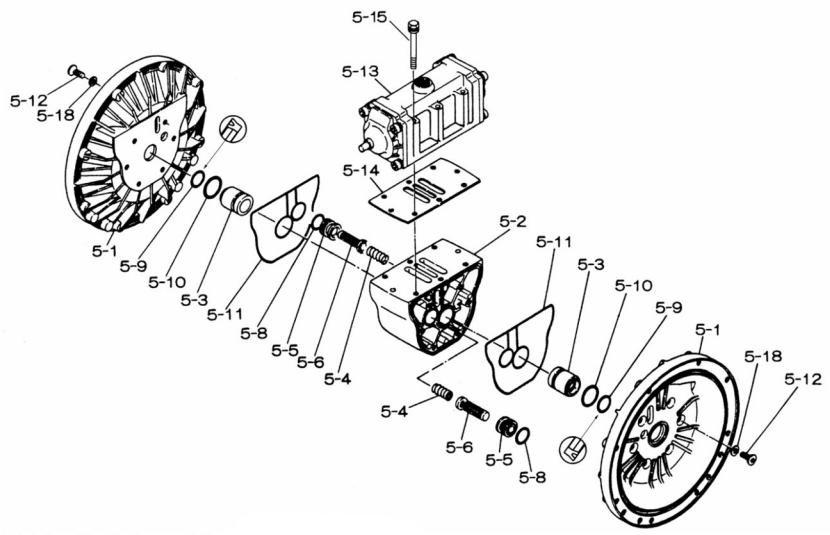

■Valve Body Assembly

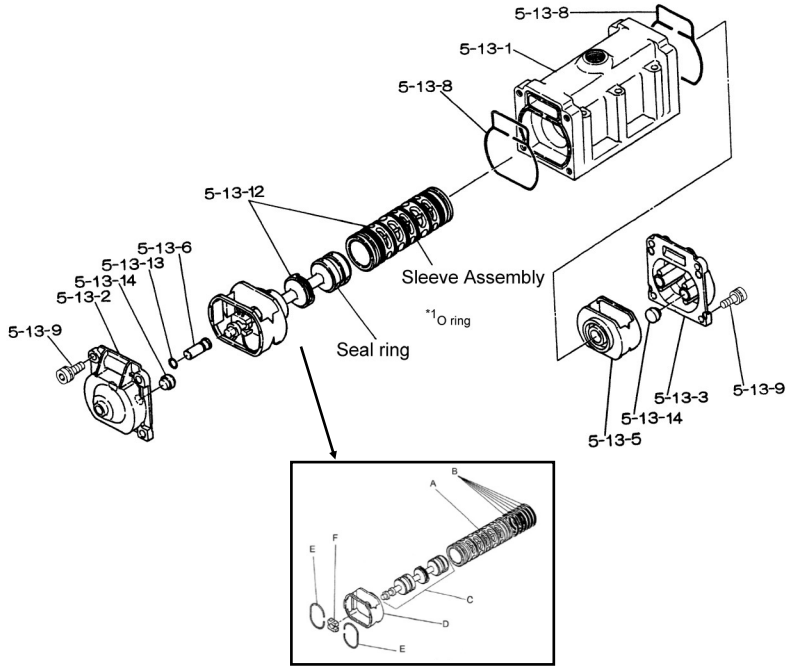

©2023 Yamada America, Inc.

EXPLODED VIEW & PARTS LISTING

Air Operated Double Diaphragm Pump

Model: NDP-50BAU
Model#: 852231-U

REF. No.	PART No.	DESCRIPTION	QTY.	REORDER
1	580961	OUT CHAMBER	2	
2	714369	IN MANIFOLD	1	
3	714363	OUT MANIFOLD	1	
5	803112	CENTER BODY ASSY.	1	
5- 1	711934	AIR CHAMBER	2	
5- 2	711936	BODY	1	
5- 3	772689	THROAT BEARING	2	
5- 4	711937	PILOT VALVE SPRING	2	
5- 5	771740	PILOT VALVE SEAT	2	
5- 6	832162	PILOT VALVE ASSY.	2	
5- 8	640020	O-RING	2	
5- 9	685444	V-PACKING	2	
5-10	640029	O-RING	2	
5-11	771742	GASKET	2	
5-12	683812	FLAT SOCKET	12	
5-13	802971	VALVE BODY ASSY.	1	
5-13-1	711931	VALVE BODY	1	
5-13-2	580999	CAP A	1	
5-13-3	581000	CAP B	1	
5-13-5	771735	SPRING RETAINER	1	
5-13-6	712976	RESET BUTTON	1	
5-13-8	771738	GASKET	2	
5-13-9	685036	SOCKET BOLT	8	
5-13-12	805084	C-SPOOL ASSY	1	
A	803675	SLEEVE ASSY	1	
B	640036	O-RING	6	
C	805085	SPOOL ASSY	1	
D	771735	SPRING RETAINER	1	
E	711932	C-SPRING	2	
F	771734	BLOCK	1	
5-13-13	640005	O-RING	1	
5-13-14	684128	CUSHION	4	
5-14	771712	GASKET	1	
5-15	684240	BOLT W/WASHERS	6	
5-18	684987	WASHER	12	
7	717130	CENTER ROD	1	
8	717133	CENTER DISK	2	
10	833220	DIAPHRAGM	2	
11	712383	VALVE SEAT	4	
12	770693	BALL	4	
14	686974	BALL VALVE	1	
15	682523	ELBOW	1	
19	711928	BASE	2	
20	771402	FOOT RUBBER	4	
23	686162	BOLT	16	
23	631917	WAVE WASHER	16	

REF. No.	PARTS No.	DESCRIPTION	QTY.	REORDER
24	631014	FLAT WASHER	4	
25	631917	WAVE WASHER	4	
26	611203	BOLT	12	
27	631015	FLAT WASHER	12	
28	631918	WAVE WASHER	12	
29	627014	NUT	12	
33	611175	BOLT	4	
34	627013	NUT	4	
35	611149	BOLT	4	
36	682276	NUT W/FLANGE	4	
40	643069	O-RING	4	
44	804764	SILENCER ASSY.	1	
53T	643139	O-RING	4	
54	773435	CUSHION	2	
KIT	K50-MU	LIQUID SIDE KIT		
KIT	K45-AM	AIR MOTOR KIT		

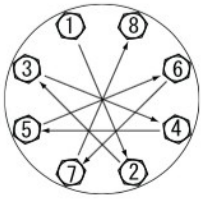

Tightening torque for out chambers.

Out Chambers	29 ft-lbf {40 N-m}
Center Rod	43 ft-lbf {60 N-m}

Tightening torque for manifold retainer bolts.

BAU	18 ft-lbf {25 N-m}

General Tools:
- Socket wrenches - 24mm
- Hexagonal box wrench - 5mm, 6mm
- Open-end wrenches - 19mm, 24mm
- Plastic hammer

Special Tools:
- Sleeve remover (713180) sold separately)

Miscellaneous:
- Assembly Oil - turbine oil none additional class 1 (equivalent to ISO VG32 grade)
- Thread locker
- Urea grease grade (NLGI) No. 2

Customer Notes

Model #: _____
Description: _____
Serial #: _____
Date Installed: _____
Department Location: _____
Tag/Project: _____

©2023 Yamada America, Inc.