EXPLODED VIEW & PARTS LISTING

Air Operated Double Diaphragm Pump

Model: NDP-80BS_-BH1
Rubber Fitted Stainless-Steel
Powder Pump

To Purchase:
800-990-7867
sales@yamadapump.com
Find My Rep

More Information:
YouTube: @yamadapump
yamadapump.com
Data Sheets | CAD Drawings | Manuals
Literature | BOM | Performance Curves

Trial Program

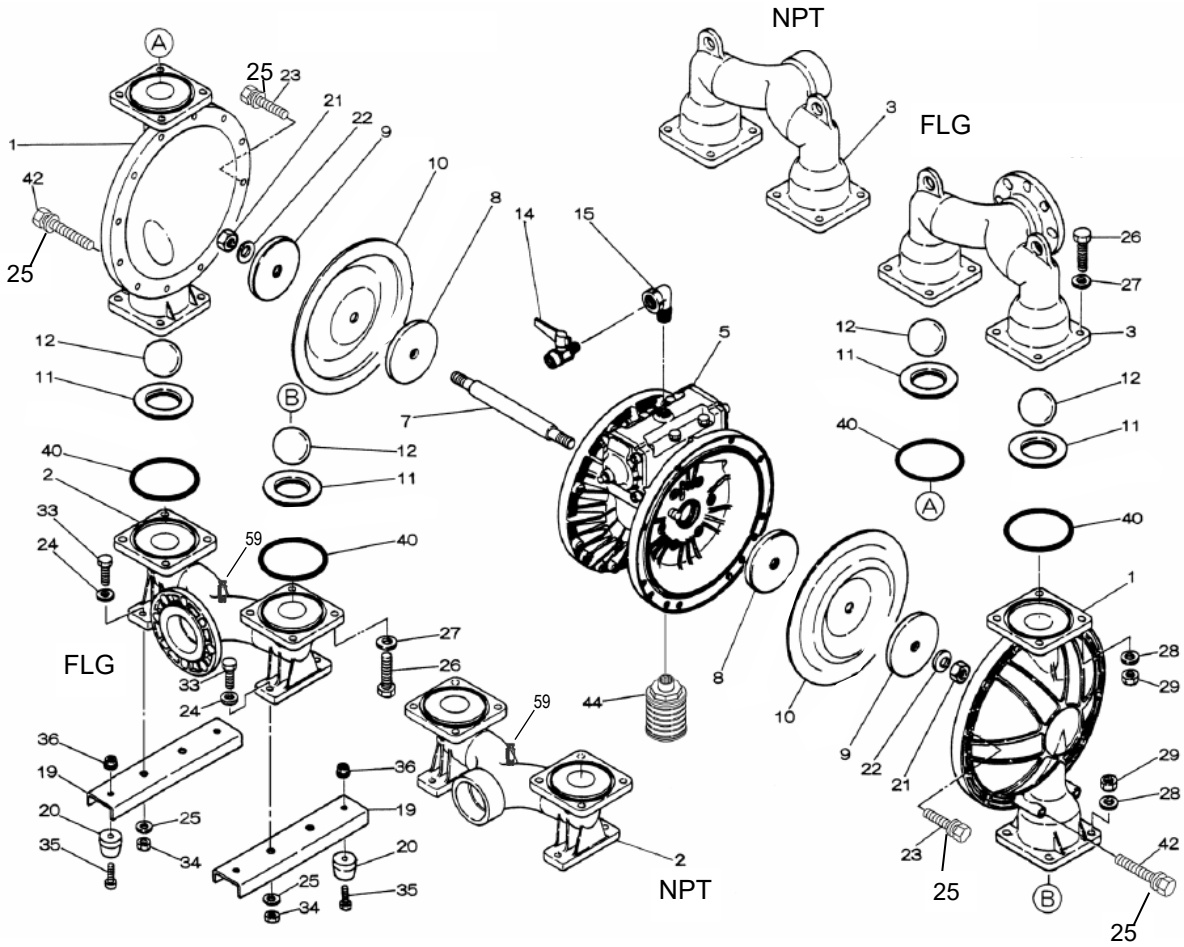

©2026 Yamada America, Inc.

■Body Assembly

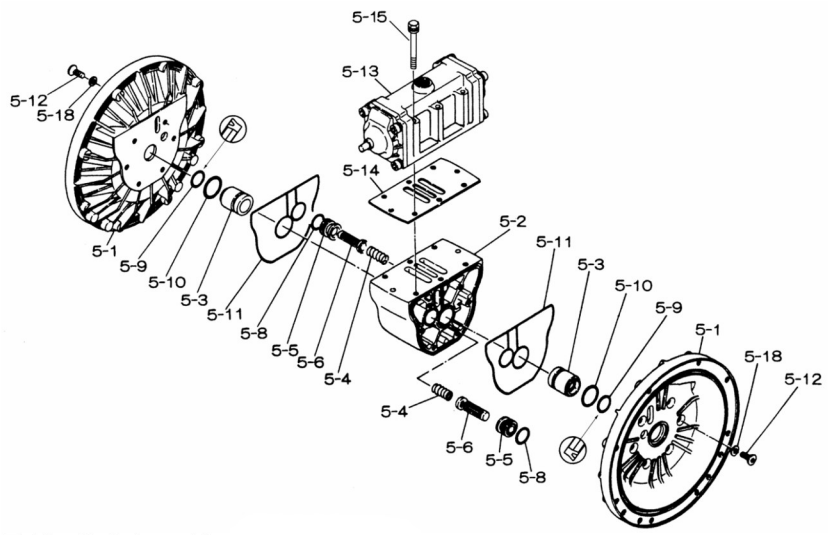

■Valve Body Assembly

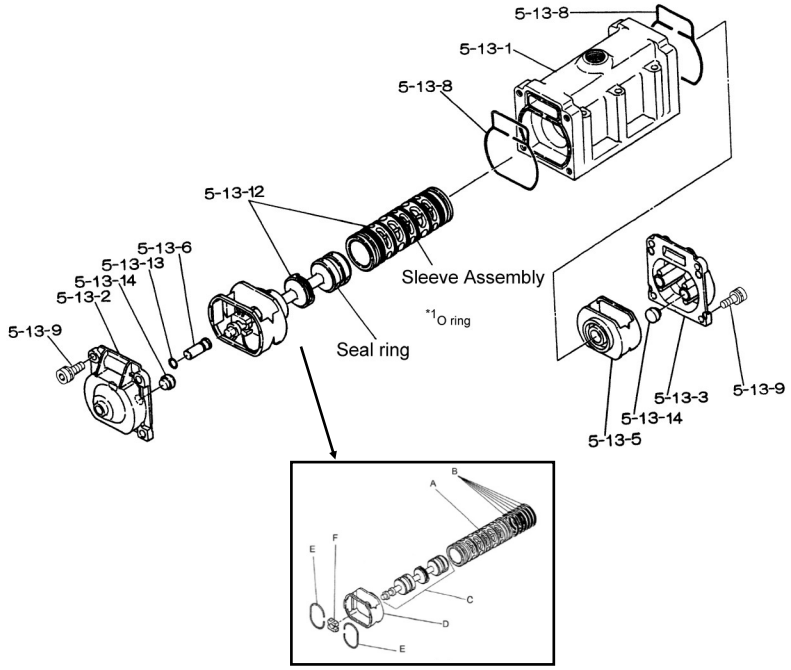

©2026 Yamada America, Inc.

EXPLODED VIEW & PARTS LISTING

Air Operated Double Diaphragm Pump

Model: NDP-80BS_-BH1
Rubber Fitted Stainless-Steel
Powder Pump

	NDP-80BSC-BH-1	NDP-80BSN-BH-1	NDP-80BSE-BH-1	NDP-80BSH-BH-1	NDP-80BSS-BH-1	NDP-80BSV-BH-1	POWDER PUMPS	
NPT	852653-BH-1	852649-BH-1	852654-BH-1	852650-BH-1	852728-BH-1	852652-BH-1	**NPT PUMPS**	
FLG	852431-BH-1	852241-BH-1	852432-BH-1	852242-BH-1	852726-BH-1	852307-BH-1	**FLANGE PUMPS**	
REF. No.	PART No.	PART No.	PART No.	PART No.	PART No.	PART No.	DESCRIPTION	QTY.
1	712933	712933	712933	712933	712933	712933	OUT CHAMBER	2
2	712605-BH	712605-BH	712605-BH	712605-BH	712605-BH	712605-BH	IN MANIFOLD (NPT) - BH	1
	712603-BH	712603-BH	712603-BH	712603-BH	712603-BH	712603-BH	IN MANIFOLD (FLG) - BH	1
3	712604	712604	712604	712604	712604	712604	OUT MANIFOLD (NPT)	1
	712602	712602	712602	712602	712602	712602	OUT MANIFOLD (FLG)	1
5	803113	803113	803113	803113	803113	803113	BODY	1
5-1	711935	711935	711935	711935	711935	711935	AIR CHAMBER	2
5-2	711936	711936	711936	711936	711936	711936	BODY	1
5-3	780325	780325	780325	780325	780325	780325	THROAT BEARING	2
5-4	711937	711937	711937	711937	711937	711937	PILOT VALVE SPRING	2
5-5	771740	771740	771740	771740	771740	771740	PILOT VALVE SEAT	2
5-6	832162	832162	832162	832162	832162	832162	PILOT VALVE ASSY	2
5-8	640020	640020	640020	640020	640020	640020	O RING	2
5-9	685444	685444	685444	685444	685444	685444	V-PACKING	2
5-10	640029	640029	640029	640029	640029	640029	O RING	2
5-11	771742	771742	771742	771742	771742	771742	GASKET	2
5-12	683812	683812	683812	683812	683812	683812	FLAT SOCKET	12
5-13	802971	802971	802971	802971	802971	802971	VALVE BODY ASSY	1
5-13-01	711931	711931	711931	711931	711931	711931	VALVE BODY	1
5-13-02	580999	580999	580999	580999	580999	580999	CAP A	1
5-13-03	581000	581000	581000	581000	581000	581000	CAP B	1
5-13-05	771735	771735	771735	771735	771735	771735	SPRING RETAINER	1
5-13-06	712976	712976	712976	712976	712976	712976	RESET BUTTON	1
5-13-08	771738	771738	771738	771738	771738	771738	GASKET	2
5-13-09	685036	685036	685036	685036	685036	685036	SOCKET BOLT	8
5-13-12	805084	805084	805084	805084	805084	805084	C SPOOL ASSY	1
A	803675	803675	803675	803675	803675	803675	SLEEVE ASSY	1
B	640036	640036	640036	640036	640036	640036	O RING	6
C	805085	805085	805085	805085	805085	805085	SPOOL ASSY	1
D	771735	771735	771735	771735	771735	771735	SPRING RETAINER	1
E	711932	711932	711932	711932	711932	711932	C SPRING	2
F	771734	771734	771734	771734	771734	771734	BLOCK	1
5-13-13	640005	640005	640005	640005	640005	640005	O RING	1
5-13-14	684128	684128	684128	684128	684128	684128	CUSHION	4
5-14	771712	771712	771712	771712	771712	771712	GASKET	1
5-15	684240	684240	684240	684240	684240	684240	BOLT W/WASHERS	6
5-18	683987	683987	683987	683987	683987	683987	WASHER	12
7	711901	711901	711901	711901	711901	711901	CENTER ROD	1
8	711906	711906	711906	711906	711906	711906	CENTER DISK	2
9	711907	711907	711907	711907	711907	711907	CENTER DISK	2
10	771857	771704	771858	771705	771977	771801	DIAPHRAGM	2
11	771958	771996	771799	771795	772005	771998	VALVE SEAT	4
12	770559	770587	770596	773144	773174	770605	BALL	4
14	686974	686974	686974	686974	686974	686974	BALL VALVE	1
15	682523	682523	682523	682523	682523	682523	ELBOW	1
19	711912	711912	711912	711912	711912	711912	BASE	2
20	771402	771402	771402	771402	771402	771402	FOOT RUBBER	4
21	683408	683408	683408	683408	683408	706144	NUT	2
22	682740	682740	682740	682740	682740	682740	WASHER	2
23	621182	621182	621182	621182	621182	621182	BOLT	20
24	631174	631174	631174	631174	631174	631174	FLAT WASHER	4
25	631917	631917	631917	631917	631917	631917	WAVE WASHER	28

©2026 Yamada America, Inc.

EXPLODED VIEW & PARTS LISTING

Air Operated Double Diaphragm Pump

Model: NDP-80BS_-BH1
Rubber Fitted Stainless-Steel
Powder Pump

	NDP-80BSC-BH-1	NDP-80BSN-BH-1	NDP-80BSE-BH-1	NDP-80BSH-BH-1	NDP-80BSS-BH-1	NDP-80BSV-BH-1	POWDER PUMPS	
NPT	852653-BH-1	852649-BH-1	852654-BH-1	852650-BH-1	852728-BH-1	852652-BH-1	**NPT PUMPS**	
FLG	852431-BH-1	852241-BH-1	852432-BH-1	852242-BH-1	852726-BH-1	852307-BH-1	**FLANGE PUMPS**	
REF. No.	PART No.	PART No.	PART No.	PART No.	PART No.	PART No.	DESCRIPTION	QTY.
26	621203	621203	621203	621203	621203	621203	BOLT	12
27	631175	631175	631175	631175	631175	631175	FLAT WASHER	12
28	631938	631938	631938	631938	631938	631938	WAVE WASHER	12
29	628014	628014	628014	628014	628014	628014	NUT	12
33	621177	621177	621177	621177	621177	621177	BOLT	4
34	628013	628013	628013	628013	628013	628013	NUT	4
35	611149	611149	611149	611149	611149	611149	BOLT	4
36	682276	682276	682276	682276	682276	682276	NUT W/FLANGE	4
40	640078	640078	684124	640078	684124	642078	O RING	4
42	683543	683543	683543	683543	683543	683543	BOLT	4
44	804764	804764	804764	804764	804764	804764	SILENCER ASSY	1
51	770582	770582	770582	770582	770582	770582	CUSHION	2
59	YA00027	YA00027	YA00027	YA00027	YA00027	YA00027	VACUUM RELIEF VALVE	1
KIT	K80-MC	K80-MN	K80-ME	K80-MH	K80-MS	K80-MV	LIQUID SIDE KIT	
KIT	K80-AM						AIR MOTOR KIT	

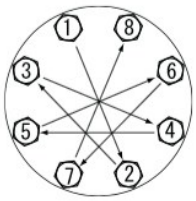

CLICK HERE FOR TORQUE

General Tools:
- Socket wrenches - 13mm, 17mm, 19mm, 24mm
- Hexagonal box wrench - 5mm, 6mm
- Small crowbars - 2 (C/N/E/V)
- Open-end wrenches - 19mm, 24mm
- Plastic hammer

Special Tools (sold separately):
- Sleeve remover (713180).

Miscellaneous:
- Nuts - M16 x 1.5
- Thread locker
- Urea grease grade (NLGI) No. 2 for Center Rod (Ref# 7)

Customer Notes

Model #: _____
Description: _____
Serial #: _____
Date Installed: _____
Department Location: _____
Tag/Project: _____

CLICK HERE FOR MAINTENANCE MANUAL

©2026 Yamada America, Inc.