EXPLODED VIEW & PARTS LISTING

Air Operated Double Diaphragm Pump

Model: NDP-50BS_-BH1
Rubber Fitted Stainless Steel
Powder Pumps

To Purchase:
800-990-7867
sales@yamadapump.com
Find My Rep

More Information:
YouTube: @yamadapump
yamadapump.com
Data Sheets | CAD Drawings | Manuals
Literature | BOM | Performance Curves

Trial Program

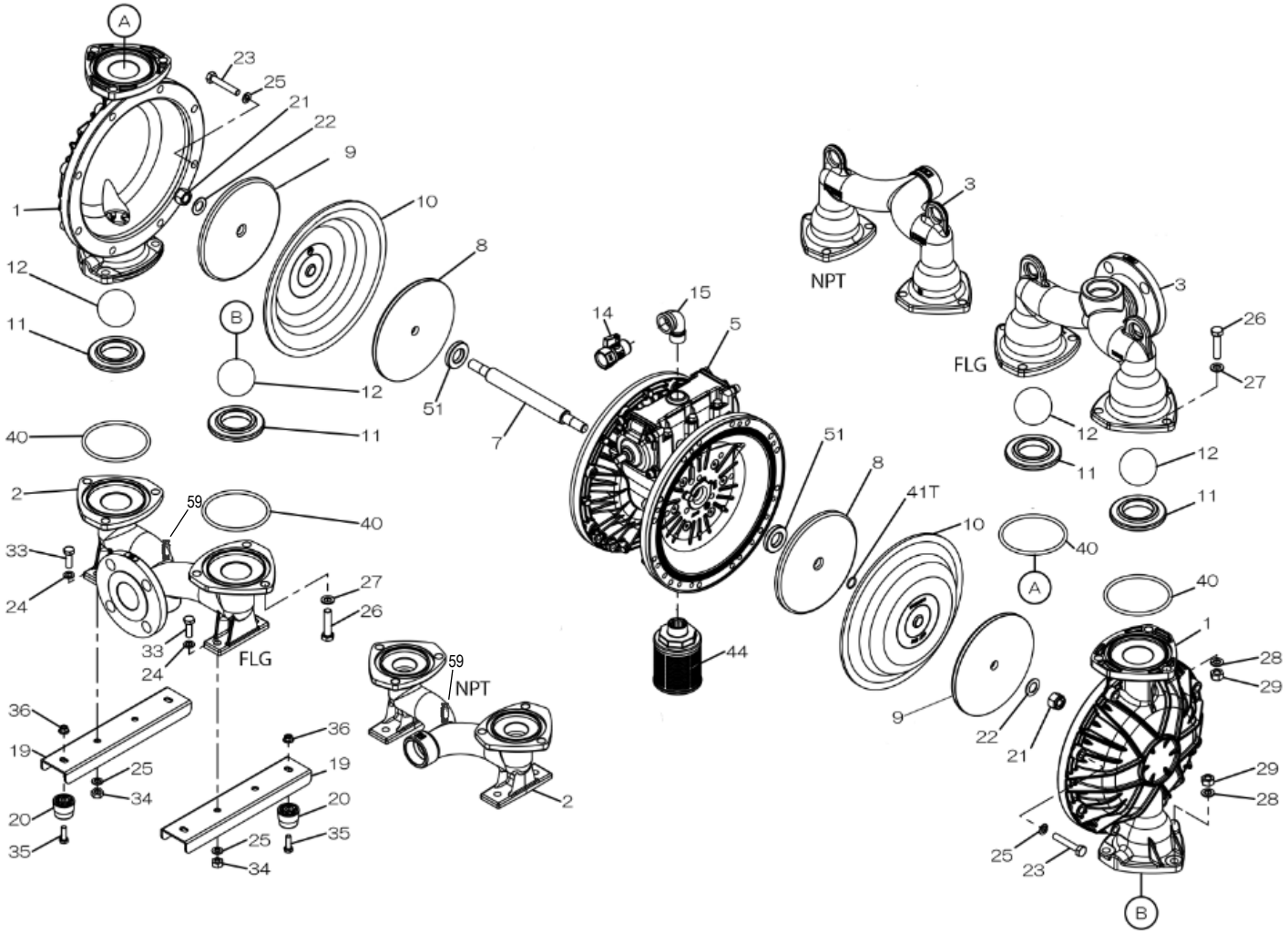

©2026 Yamada America, Inc.

■Body Assembly

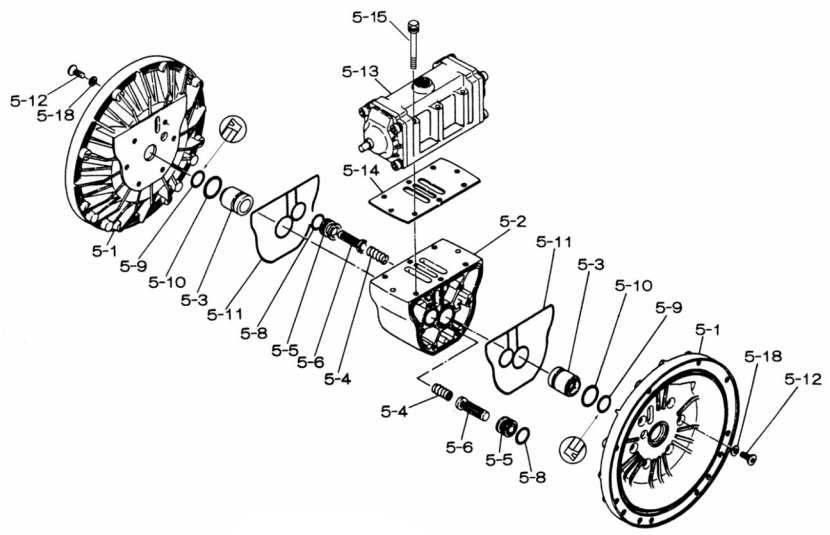

■Valve Body Assembly

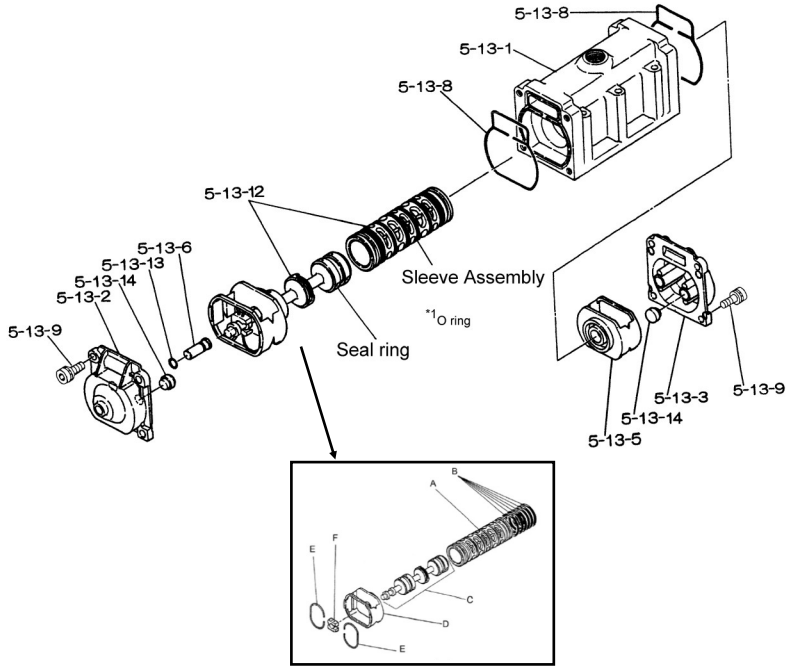

©2026 Yamada America, Inc.

EXPLODED VIEW & PARTS LISTING

Air Operated Double Diaphragm Pump

Model: NDP-50BS_-BH1
Rubber Fitted Stainless Steel
Powder Pumps

	NDP-50BSC-BH-1	NDP-50BSN-BH-1	NDP-50BSE-BH-1	NDP-50BSH-BH-1	NDP-50BSS-BH-1	NDP-50BSV-BH-1		
	852647-BH-1	852643-BH-1	852648-BH-1	852644-BH-1	852721-BH-1	852646-BH-1		
	852425-BH-1	852232-BH-1	852426-BH-1	852233-BH-1	852718-BH-1	852304-BH-1		
REF. No.	PARTS No.	PARTS No.	PARTS No.	PARTS No.	PARTS No.	PARTS No.	DESCRIPTION	QTY.
1	712932	712932	712932	712932	712932	712932	OUT CHAMBER	2
2	712559-BH	712559-BH	712559-BH	712559-BH	712559-BH	712559-BH	IN MANIFOLD (NPT)	1
2	712557-BH	712557-BH	712557-BH	712557-BH	712557-BH	712557-BH	IN MANIFOLD (FLG)	1
3	712558	712558	712558	712558	712558	712558	OUT MANIFOLD (NPT)	1
3	712556	712556	712556	712556	712556	712556	OUT MANIFOLD (FLG)	1
5	**803112**	**803112**	**803112**	**803112**	**803112**	**803112**	**CENTER BODY ASSY.**	**1**
5- 1	711934	711934	711934	711934	711934	711934	AIR CHAMBER	2
5- 2	711936	711936	711936	711936	711936	711936	BODY	1
5- 3	780325	780325	780325	780325	780325	780325	THROAT BEARING	2
5- 4	711937	711937	711937	711937	711937	711937	PILOT VALVE SPRING	2
5- 5	771740	771740	771740	771740	771740	771740	PILOT VALVE SEAT	2
5- 6	832162	832162	832162	832162	832162	832162	PILOT VALVE ASSY.	2
5- 8	640020	640020	640020	640020	640020	640020	O-RING	2
5- 9	685444	685444	685444	685444	685444	685444	V-PACKING	2
5-10	640029	640029	640029	640029	640029	640029	O-RING	2
5-11	771742	771742	771742	771742	771742	771742	GASKET	2
5-12	683812	683812	683812	683812	683812	683812	FLAT SOCKET	12
5-13	802971	802971	802971	802971	802971	802971	VALVE BODY ASSY.	1
5-13-1	711931	711931	711931	711931	711931	711931	VALVE BODY	1
5-13-2	580999	580999	580999	580999	580999	580999	CAP A	1
5-13-3	581000	581000	581000	581000	581000	581000	CAP B	1
5-13-5	771735	771735	771735	771735	771735	771735	SPRING RETAINER	1
5-13-6	712976	712976	712976	712976	712976	712976	RESET BUTTON	1
5-13-8	771738	771738	771738	771738	771738	771738	GASKET	2
5-13-9	685036	685036	685036	685036	685036	685036	SOCKET BOLT	8
5-13-12	**805084**	**805084**	**805084**	**805084**	**805084**	**805084**	**C-SPOOL ASSY**	**1**
A	803675	803675	803675	803675	803675	803675	SLEEVE ASSY W/ O-RING	1
B	640036	640036	640036	640036	640036	640036	O-RING	6
C	805085	805085	805085	805085	805085	805085	SPOOL ASSY	1
D	771735	771735	771735	771735	771735	771735	SPRING RETAINER	1
E	711932	711932	711932	711932	711932	711932	C-SPRING	2
F	771734	771734	771734	771734	771734	771734	BLOCK	1
5-13-13	640005	640005	640005	640005	640005	640005	O-RING	1
5-13-14	684128	684128	684128	684128	684128	684128	CUSHION	4
5-14	771712	771712	771712	771712	771712	771712	GASKET	1
5-15	684240	684240	684240	684240	684240	684240	BOLT W/WASHERS	6
5-18	684987	684987	684987	684987	684987	684987	WASHER	12
7	711900	711900	711900	711900	711900	711900	CENTER ROD	1
8	711904	711904	711904	711904	711904	711904	CENTER DISK	2
9	711905	711905	711905	711905	711905	711905	CENTER DISK 50SS	2
10	771855	771702	771856	771703	771976	771800	DIAPHRAGM	2
11	771957	771995	771949	771794	772004	771987	VALVE SEAT	4
12	770627	770630	770633	773143	773173	770636	BALL	4
14	686974	686974	686974	686974	686974	686974	BALL VALVE	1
15	682523	682523	682523	682523	682523	682523	ELBOW	1
19	711928	711928	711928	711928	711928	711928	BASE	2
20	771402	771402	771402	771402	771402	771402	FOOT RUBBER	4
21	683408	683408	683408	683408	683408	683408	NUT	2
22	682740	682740	682740	682740	682740	682740	WASHER	2
23	686162	686162	686162	686162	686162	686162	BOLT	16

©2026 Yamada America, Inc.

Model: NDP-50BS_-BH1
Rubber Fitted Stainless Steel Powder Pumps

	NDP-50BSC-BH-1	NDP-50BSN-BH-1	NDP-50BSE-BH-1	NDP-50BSH-BH-1	NDP-50BSS-BH-1	NDP-50BSV-BH-1		
	852647-BH-1	852643-BH-1	852648-BH-1	852644-BH-1	852721-BH-1	852646-BH-1		
	852425-BH-1	852232-BH-1	852426-BH-1	852233-BH-1	852718-BH-1	852304-BH-1		
REF. No.	PARTS No.	PARTS No.	PARTS No.	PARTS No.	PARTS No.	PARTS No.	DESCRIPTION	QTY.
24	631174	631174	631174	631174	631174	631174	FLAT WASHER	4
25	631937	631937	631937	631937	631937	631937	WAVE WASHER	20
26	621202	621202	621202	621202	621202	621202	BOLT	12
27	631175	631175	631175	631175	631175	631175	FLAT WASHER	12
28	631938	631938	631938	631938	631938	631938	WAVE WASHER	12
29	628014	628014	628014	628014	628014	628014	NUT	12
33	621175	621175	621175	621175	621175	621175	BOLT	4
34	628013	628013	628013	628013	628013	628013	NUT	4
35	611149	611149	611149	611149	611149	611149	BOLT	4
36	628276	682276	682276	682276	682276	682276	NUT W/FLANGE	4
40	640069	640069	684122	640069	684122	642069	O-RING	4
44	804764	804764	804764	804764	804764	804764	SILENCER ASSY.	1
51	770582	770582	770582	770582	770582	770582	CUSHION	2
59	YA00027	YA00027	YA00027	YA00027	YA00027	YA00027	VACUUM RELIEF VALVE	1
KIT	K50-MC	K50-MN	K50-ME	K50-MH	K50-MS	K50-MV	LIQUID SIDE KIT	
KIT	K45-AM	K45-AM	K45-AM	K45-AM	K45-AM	K45-AM	AIR MOTOR KIT	

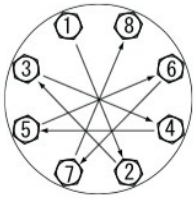

CLICK HERE FOR TORQUE

General Tools:
- Socket wrenches - 13mm, 17mm, 19mm, 24mm
- Hexagonal box wrench - 5mm, 6mm
- Small crowbars - 2 (C/N/E/V)
- Open-end wrenches - 19mm, 24mm
- Plastic hammer

Special Tools (sold separately):
- Sleeve remover (713180).

Miscellaneous:
- Nuts - M16 x 1.5
- Thread locker
- Urea grease grade (NLGI) No. 2 for Center Rod (Ref# 7)

Customer Notes

Model #: _____
Description: _____
Serial #: _____
Date Installed: _____
Department Location: _____
Tag/Project: _____

CLICK HERE FOR MAINTENANCE MANUAL

©2026 Yamada America, Inc.