EXPLODED VIEW & PARTS LISTING

Air Operated Double Diaphragm Pump

Model: NDP-40BS_-BH2
Rubber Fitted Stainless-Steel
Powder Pump

To Purchase:
800-990-7867
sales@yamadapump.com
Find My Rep

More Information:
YouTube: @yamadapump
yamadapump.com
Data Sheets | CAD Drawings | Manuals
Literature | BOM | Performance Curves

Trial Program

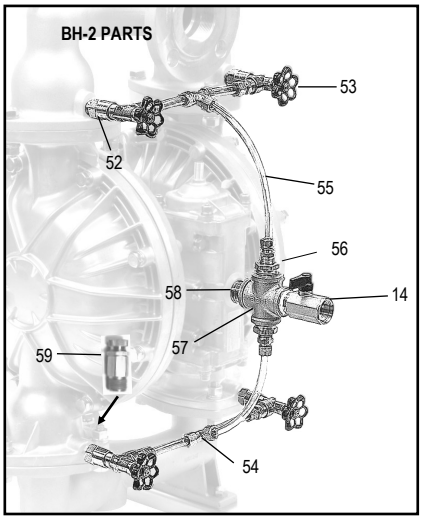

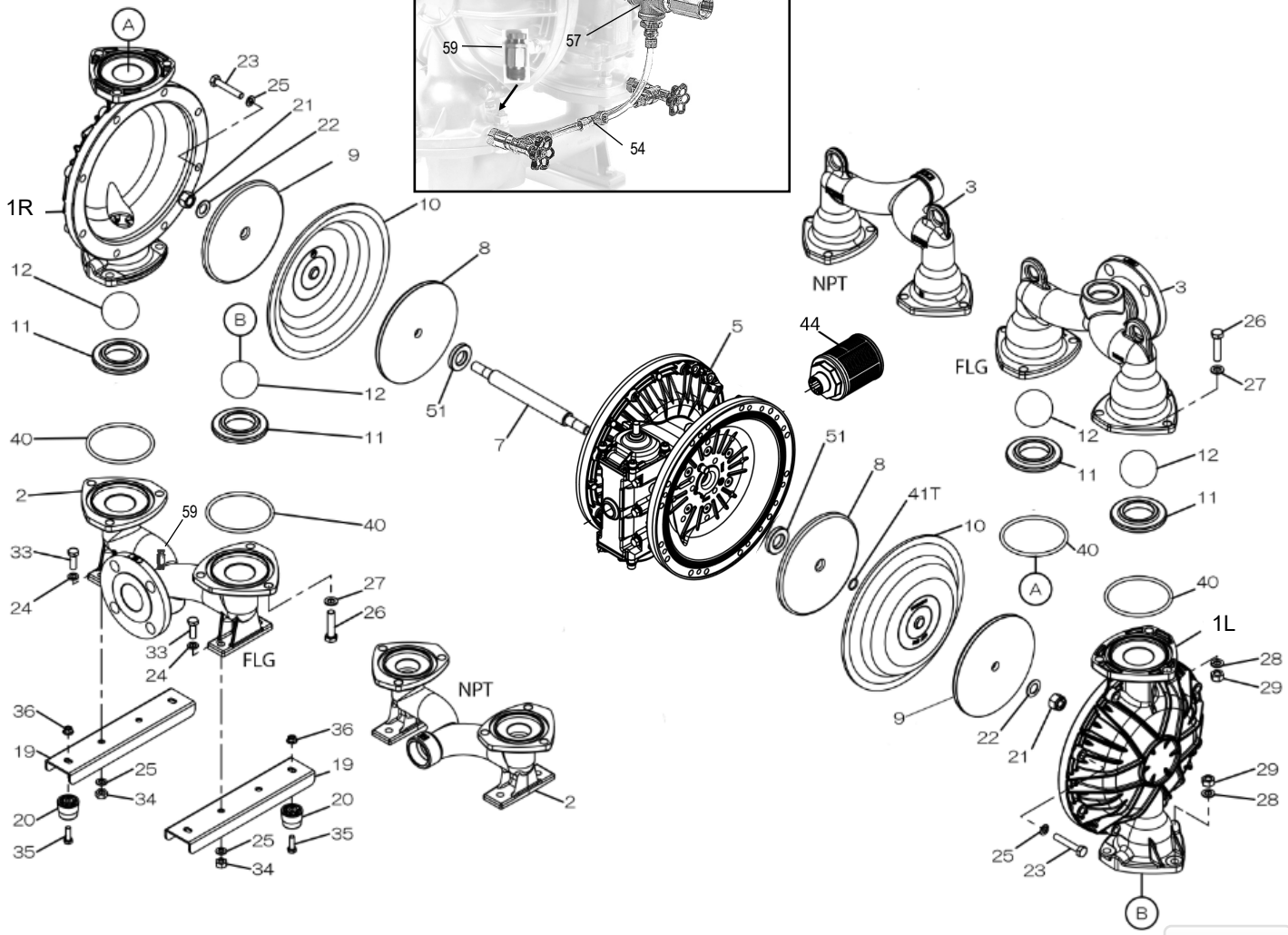

©2026 Yamada America, Inc.

■Body Assembly

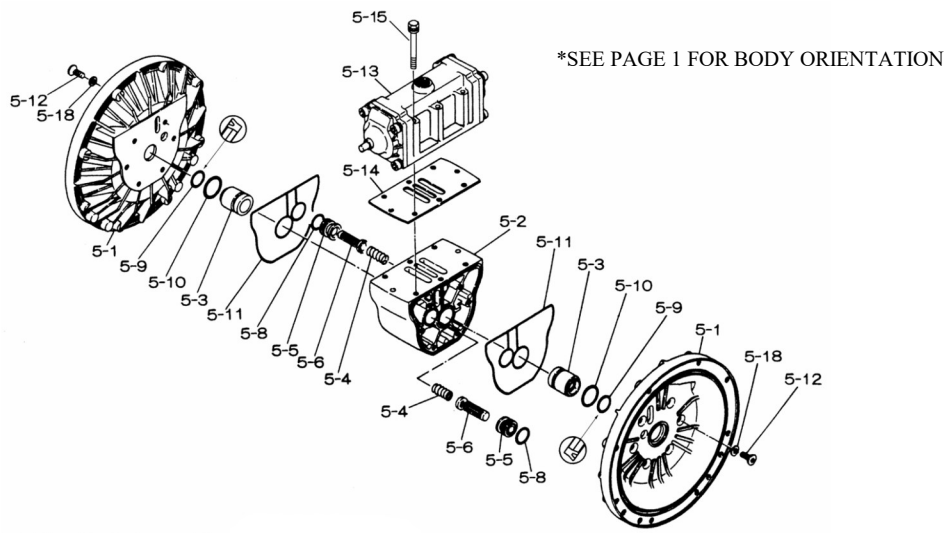

*SEE PAGE 1 FOR BODY ORIENTATION

■Valve Body Assembly

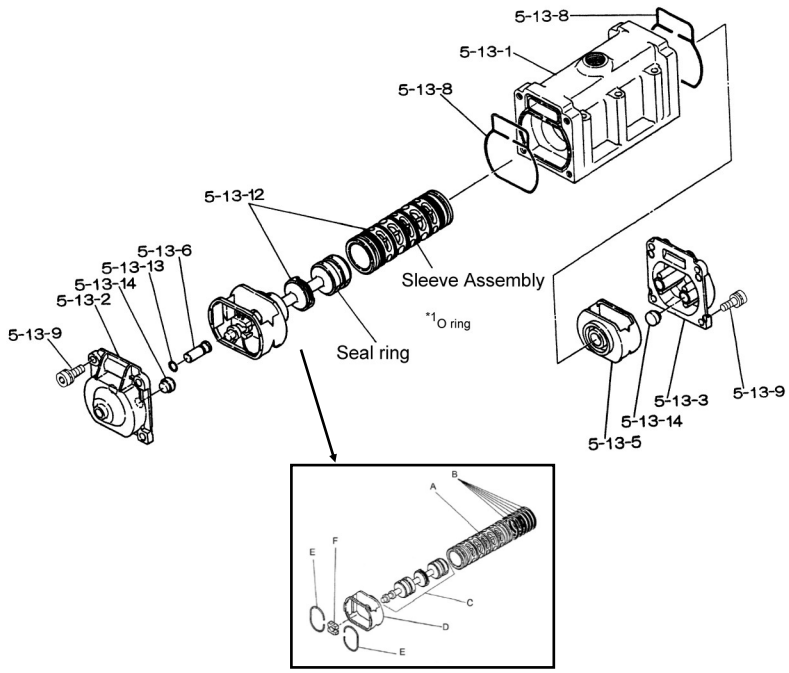

©2026 Yamada America, Inc.

EXPLODED VIEW & PARTS LISTING

Air Operated Double Diaphragm Pump

Model: NDP-40BS_-BH2
Rubber Fitted Stainless-Steel
Powder Pump

	NDP-40BSC-BH-2	NDP-40BSN-BH-2	NDP-40BSE-BH-2	NDP-40BSH-BH-2	NDP-40BSS-BH-2	NDP-40BAV-BH-2	POWDER PUMPS	
NPT	852641-BH-2	852642-BH-2	852637-BH-2	852638-BH-2	852712-BH-2	852640-BH-2	** NPT **	
FLANGE	852419-BH-2	852420-BH-2	852223-BH-2	852224-BH-2	852710-BH-2	852301-BH-2	** FLANGE **	
Ref. No.	PARTS No.	PARTS No.	PARTS No.	PARTS No.	PARTS No.	PARTS No.	DESCRIPTION	QTY.
1L	712931-PL	712931-PL	712931-PL	712931-PL	712931-PL	712931-PL	OUT CHAMBER (LEFT)	1
1R	712931-PR	712931-PR	712931-PR	712931-PR	712931-PR	712931-PR	OUT CHAMBER (RIGHT)	1
2	712601-P	712601-P	712601-P	712601-P	712601-P	712601-P	IN MANIFOLD (NPT) - BH	1
	712599-P	712599-P	712599-P	712599-P	712599-P	712599-P	IN MANIFOLD (FLANGE) - BH	1
3	712600-P	712600-P	712600-P	712600-P	712600-P	712600-P	OUT MANIFOLD (NPT) - BH	1
	712598-P	712598-P	712598-P	712598-P	712598-P	712598-P	OUT MANIFOLD (FLANGE) - BH	1
5	803111	803111	803111	803111	803111	803111	CENTER BODY ASSY.	1
5-1	711933	711933	711933	711933	711933	711933	AIR CHAMBER	2
5-2	711936	711936	711936	711936	711936	711936	BODY	1
5-3	780325	780325	780325	780325	780325	780325	THROAT BEARING	2
5-4	711937	711937	711937	711937	711937	711937	PILOT VALVE SPRING	2
5-5	771740	771740	771740	771740	771740	771740	PILOT VALVE SEAT	2
5-6	832162	832162	832162	832162	832162	832162	PILOT VALVE ASSY	2
5-8	640020	640020	640020	640020	640020	640020	O-RING	2
5-9	685444	685444	685444	685444	685444	685444	V-PACKING	2
5-10	640029	640029	640029	640029	640029	640029	O-RING	2
5-11	771742	771742	771742	771742	771742	771742	GASKET	2
5-12	683812	683812	683812	683812	683812	683812	FLAT SOCKET BOLT	12
5-13	802971	802971	802971	802971	802971	802971	VALVE BODY ASSY.	1
5-13-1	711931	711931	711931	711931	711931	711931	VALVE BODY	1
5-13-2	580999	580999	580999	580999	580999	580999	CAP A	1
5-13-3	581000	581000	581000	581000	581000	581000	CAP B	1
5-13-5	771735	771735	771735	771735	771735	771735	SPRING RETAINER	1
5-13-6	712976	712976	712976	712976	712976	712976	RESET BUTTON	1
5-13-8	771738	771738	771738	771738	771738	771738	GASKET	2
5-13-9	685036	685036	685036	685036	685036	685036	SOCKET BOLT W/ WASHER	8
5-13-12	805084	805084	805084	805084	805084	805084	C SPOOL ASSY.	1
A	803675	803675	803675	803675	803675	803675	SLEEVE ASSY.	1
B	640036	640036	640036	640036	640036	640036	O-RING	6
C	805085	805085	805085	805085	805085	805085	SPOOL ASSY.	1
D	771735	771735	771735	771735	771735	771735	SPRING RETAINER	1
E	711932	711932	711932	711932	711932	711932	C-SPRING	2
F	771734	771734	771734	771734	771734	771734	BLOCK	1
5-13-13	640005	640005	640005	640005	640005	640005	O RING	1
5-13-14	684128	684128	684128	684128	684128	684128	CUSHION	4
5-14	771712	771712	771712	771712	771712	771712	GASKET	1
5-15	684240	684240	684240	684240	684240	684240	BOLT W/ WASHER	6
5-18	684987	684987	684987	684987	684987	684987	WASHER	12
7	711900	711900	711900	711900	711900	711900	CENTER ROD	1
8	711902	711902	711902	711902	711902	711902	CENTER DISK	2
9	711903	711903	711903	711903	711903	711903	CENTER DISK	2
10	771853	771854	771700	771701	771975	771799	DIAPHRAGM	2
11	771956	771921	771994	771793	772003	771997	VALVE SEAT	4
12	770550	770593	770584	773142	773172	770602	BALL	4
16	684339	684339	684339	684339	684339	684339	BUSHING	1
19	711911	711911	711911	711911	711911	711911	BASE	2
20	771402	771402	771402	771402	771402	771402	FOOT RUBBER	4
21	683408	683408	683408	683408	683408	683408	NUT	2
22	682740	682740	682740	682740	682740	682740	WASHER	2
23	621180	621180	621180	621180	621180	621180	BOLT	16
24	631174	631174	631174	631174	631174	631174	FLAT WASHER	4
25	631937	631937	631937	631937	631937	631937	WAVE WASHER	20

©2026 Yamada America, Inc.

EXPLODED VIEW & PARTS LISTING

Air Operated Double Diaphragm Pump

Model: NDP-40BS_-BH2
Rubber Fitted Stainless-Steel
Powder Pump

	NDP-40BSC-BH-2	NDP-40BSN-BH-2	NDP-40BSE-BH-2	NDP-40BSH-BH-2	NDP-40BSS-BH-2	NDP-40BAV-BH-2	POWDER PUMPS	
NPT	852641-BH-2	852642-BH-2	852637-BH-2	852638-BH-2	852712-BH-2	852640-BH-2	** NPT **	
FLANGE	852419-BH-2	852420-BH-2	852223-BH-2	852224-BH-2	852710-BH-2	852301-BH-2	** FLANGE **	
Ref. No.	PARTS No.	PARTS No.	PARTS No.	PARTS No.	PARTS No.	PARTS No.	DESCRIPTION	QTY.
26	621202	621202	621202	621202	621202	621202	BOLT	12
27	631175	631175	631175	631175	631175	631175	FLAT WASHR	12
28	631938	631938	631938	631938	631938	631938	WAVE WASHER	12
29	628014	628014	628014	628014	628014	628014	NUT	12
33	621175	621175	621175	621175	621175	621175	BOLT	4
34	628013	628013	628013	628013	628013	628013	NUT	4
35	611149	611149	611149	611149	611149	611149	BOLT	4
36	682276	682276	682276	682276	682276	682276	NUT W/ FLANGE	4
40	640065	683999	640065	640065	683999	642065	O-RING	4
44	804764	804764	804764	804764	804764	804764	SILENCER	1
51	770582	770582	770582	770582	770582	770582	CUSHION	2
52	7768K23	7768K23	7768K23	7768K23	7768K23	7768K23	CHECK VALVE	4
53	45065K32	45065K32	45065K32	45065K32	45065K32	45065K32	TRUCK VALVE	4
54	5220K139	5220K139	5220K139	5220K139	5220K139	5220K139	TEE CONNECT-OR	2
55	8359K16	8359K16	8359K16	8359K16	8359K16	8359K16	NYLON TUBING 5FT.	1
56	4429K418	4429K418	4429K418	4429K418	4429K418	4429K418	BUSHING	2
57	4429K354	4429K354	4429K354	4429K354	4429K354	4429K354	CROSS	1
58	4568K191	4568K191	4568K191	4568K191	4568K191	4568K191	NIPPLE	1
59	48935K35	48935K35	48935K35	48935K35	48935K35	48935K35	VACUUM RELIEF VALVE	1
KIT	K40-MC	K40-MN	K40-ME	K40-MH	K40-MS	K40-MV	LIQUID END KIT	
KIT	K45-AM						AIR MOTOR KIT	

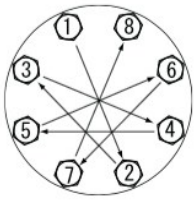

CLICK HERE FOR TORQUE

General Tools:
- Socket wrenches - 13mm, 17mm, 19mm, 24mm
- Hexagonal box wrench - 5mm, 6mm
- Small crowbars - 2 (C/N/E/V)
- Open-end wrenches - 19mm, 24mm
- Plastic hammer

Special Tools (sold separately):
- Sleeve remover (713180).

Miscellaneous:
- Nuts - M16 x 1.5
- Thread locker
- Urea grease grade (NLGI) No. 2 for Center Rod (Ref# 7)

Customer Notes

Model #: _____
Description: _____
Serial #: _____
Date Installed: _____
Department Location: _____
Tag/Project: _____

CLICK HERE FOR MAINTENANCE MANUAL

©2026 Yamada America, Inc.