EXPLODED VIEW & PARTS LISTING

Air Operated Double Diaphragm Pump

Model: NDP-40BF_-BH2
Rubber Fitted Cast Iron
Powder Pump

To Purchase:
800-990-7867
sales@yamadapump.com
Find My Rep

More Information:
YouTube: @yamadapump
yamadapump.com
Data Sheets | CAD Drawings | Manuals
Literature | BOM | Performance Curves

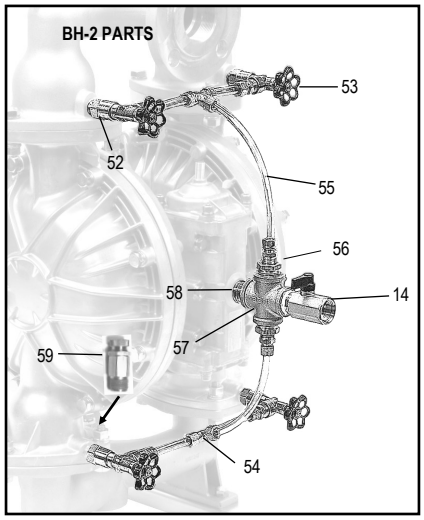

Trial Program

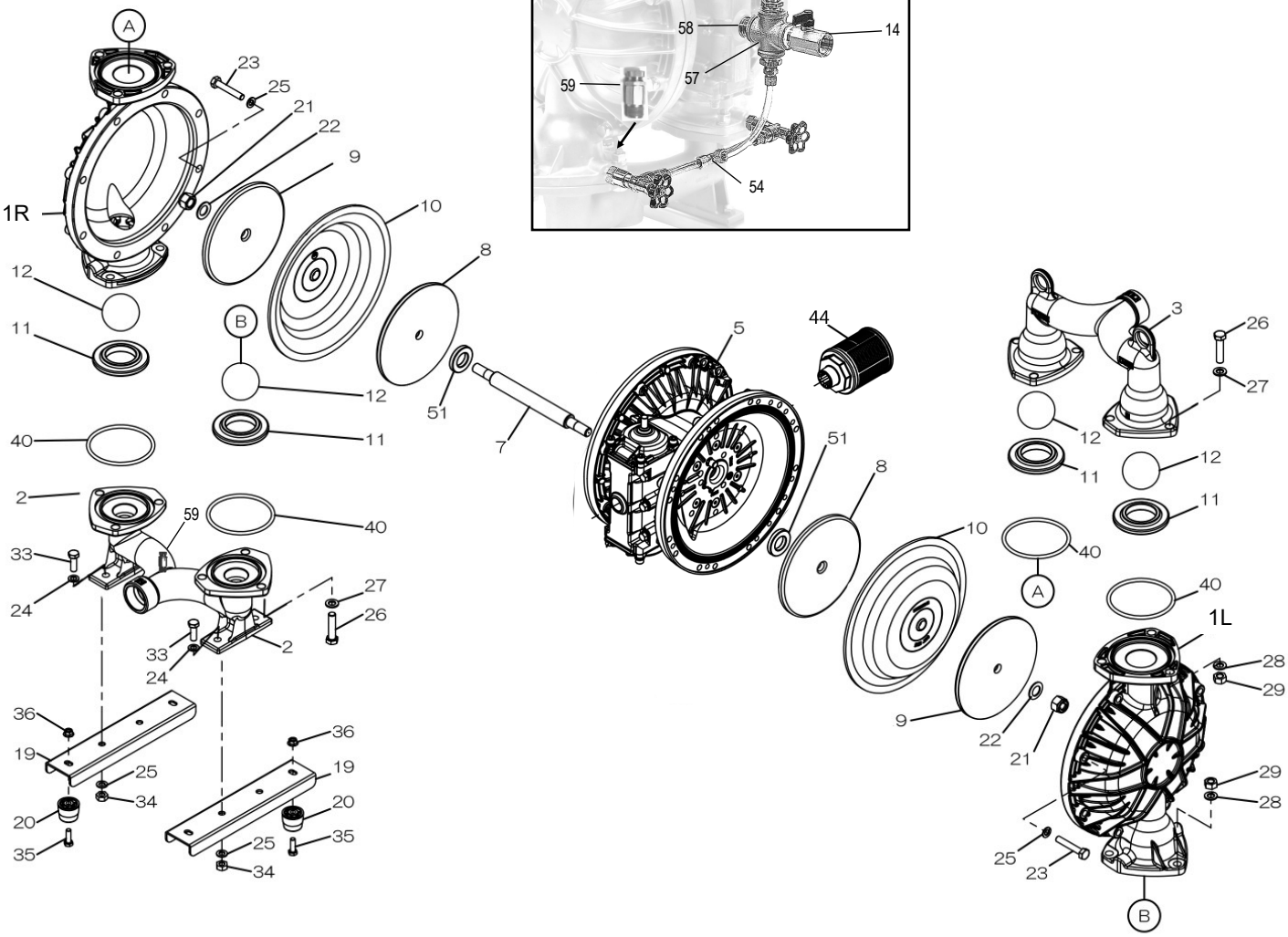

©2026 Yamada America, Inc.

■Body Assembly

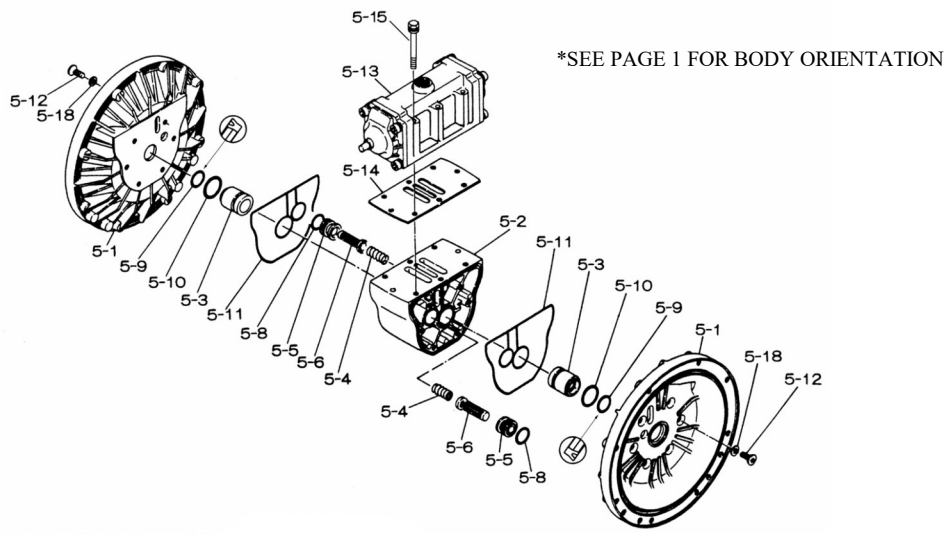

*SEE PAGE 1 FOR BODY ORIENTATION

■Valve Body Assembly

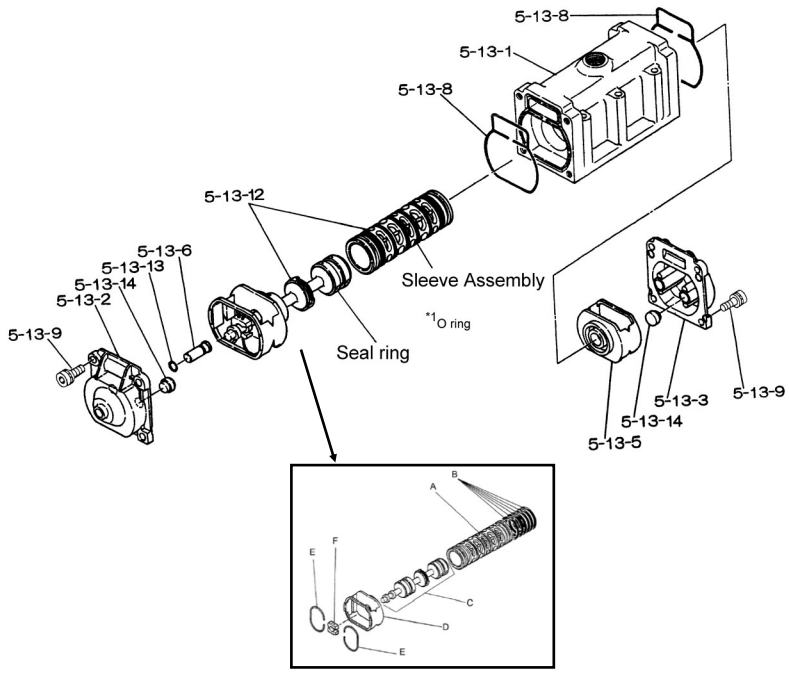

©2026 Yamada America, Inc.

Model: NDP-40BF_-BH2 Rubber Fitted Cast Iron Powder Pump

	NDP-40BFC-BH-2	NDP-40BFN-BH-2	NDP-40BFE-BH-2	NDP-40BFH-BH-2	NDP-40BFS-BH-2	NDP-40BFV-BH-2	POWDER PUMPS	
	852873-BH-2	852869-BH-2	852875-BH-2	852870-BH-2	852875-BH-2	852872-BH-2		
REF. No.	PART No.	PART No.	PART No.	PART No.	PART No.	PART No.	DESCRIPTION	QTY.
1L	713156-PL	713156-PL	713156-PL	713156-PL	713156-PL	713156-PL	OUT CHAMBER (LEFT)	1
1R	713156-PR	713156-PR	713156-PR	713156-PR	713156-PR	713156-PR	OUT CHAMBER (RIGHT)	1
2	713168-P	713168-P	713168-P	713168-P	713168-P	713168-P	IN MANIFOLD - BH	1
3	713165-P	713165-P	713165-P	713165-P	713165-P	713165-P	OUT MANIFOLD - BH	1
5	803111	803111	803111	803111	803111	803111	BODY	1
5-1	711933	711933	711933	711933	711933	711933	AIR CHAMBER	2
5-2	711936	711936	711936	711936	711936	711936	BODY	1
5-3	780325	780325	780325	780325	780325	780325	THROAT BEARING	2
5-4	711937	711937	711937	711937	711937	711937	PILOT VALVE SPRING	2
5-5	771740	771740	771740	771740	771740	771740	PILOT VALVE SEAT	2
5-6	832162	832162	832162	832162	832162	832162	PILOT VALVE ASSY	2
5-8	640020	640020	640020	640020	640020	640020	O RING	2
5-9	685444	685444	685444	685444	685444	685444	V-PACKING	2
5-10	640029	640029	640029	640029	640029	640029	O RING	2
5-11	771742	771742	771742	771742	771742	771742	GASKET	2
5-12	683812	683812	683812	683812	683812	683812	FLAT SOCKET	12
5-13	802971	802971	802971	802971	802971	802971	VALVE BODY ASSY	1
5-13-01	711931	711931	711931	711931	711931	711931	VALVE BODY	1
5-13-02	580999	580999	580999	580999	580999	580999	CAP A	1
5-13-03	581000	581000	581000	581000	581000	581000	CAP B	1
5-13-05	771735	771735	771735	771735	771735	771735	SPRING RETAINER	1
5-13-06	712976	712976	712976	712976	712976	712976	RESET BUTTON	1
5-13-08	771738	771738	771738	771738	771738	771738	GASKET	2
5-13-09	685036	685036	685036	685036	685036	685036	SOCKET BOLT	8
5-13-12	805084	805084	805084	805084	805084	805084	C SPOOL ASSY	1
A	803675	803675	803675	803675	803675	803675	SLEEVE ASSY	1
B	640036	640036	640036	640036	640036	640036	O RING	6
C	805085	805085	805085	805085	805085	805085	SPOOL ASSY	1
D	771735	771735	771735	771735	771735	771735	SPRING RETAINER	1
E	711932	711932	711932	711932	711932	711932	C SPRING	2
F	771734	771734	771734	771734	771734	771734	BLOCK	1
5-13-13	640005	640005	640005	640005	640005	640005	O RING	1
5-13-14	684128	684128	684128	684128	684128	684128	CUSHION	4
5-14	771712	771712	771712	771712	771712	771712	GASKET	1
5-15	684240	684240	684240	684240	684240	684240	BOLT W/WASHERS	6
5-18	683987	683987	683987	683987	683987	683987	WASHER	12
7	711900	711900	711900	711900	711900	711900	CENTER ROD	1
8	711902	711902	711902	711902	711902	711902	CENTER DISK	2
9	713369	713369	713369	713369	713369	713369	CENTER DISK 40 FC	2
10	771853	771700	771854	771701	771975	771799	DIAPHRAGM	2
11	771956	771994	771793	771793	772003	771997	VALVE SEAT	4
12	770550	770584	770593	773142	773172	770602	BALL	4
16	684339	684339	684339	684339	684339	684339	BUSHING	1
19	711911	711911	711911	711911	711911	711911	BASE	2
20	771402	771402	771402	771402	771402	771402	FOOT RUBBER	4
21	683408	683408	683408	683408	683408	683408	NUT	2
22	682740	682740	682740	682740	682740	682740	WASHER	2
23	686160	686160	686160	686160	686160	686160	BOLT	16
24	631014	631014	631014	631014	631014	631014	FLAT WASHER	4
25	631917	631917	631917	631917	631917	631917	WAVE WASHER	20

©2026 Yamada America, Inc.

Model: NDP-40BF_-BH2 Rubber Fitted Cast Iron Powder Pump

	NDP-40BFC-BH-2	NDP-40BFN-BH-2	NDP-40BFE-BH-2	NDP-40BFH-BH-2	NDP-40BFS-BH-2	NDP-40BFV-BH-2	POWDER PUMPS	
	852873-BH-2	852869-BH-2	852875-BH-2	852870-BH-2	852875-BH-2	852872-BH-2		
REF.	PART No.	PART No.	PART No.	PART No.	PART No.	PART No.	DESCRIPTION	QTY.
26	611202	611202	611202	611202	611202	611202	BOLT	12
27	631015	631015	631015	631015	631015	631015	FLAT WASHER	12
28	631918	631918	631918	631918	631918	631918	WAVE WASHER	12
29	627014	627014	627014	627014	627014	627014	NUT	12
33	611175	611175	611175	611175	611175	611175	BOLT	4
34	627013	627013	627013	627013	627013	627013	NUT	4
35	611149	611149	611149	611149	611149	611149	BOLT	4
36	682276	682276	682276	682276	682276	682276	NUT W/FLANGE	4
40	640065	640065	683999	640065	683999	642065	O RING	4
44	805764	805764	805764	805764	805764	805764	SILENCER ASSY	1
51	770582	770582	770582	770582	770582	770582	CUSHION	2
52	7768K23	7768K23	7768K23	7768K23	7768K23	7768K23	CHECK VALVE	4
53	45065K32	45065K32	45065K32	45065K32	45065K32	45065K32	TRUCK VALVE	4
54	5220K139	5220K139	5220K139	5220K139	5220K139	5220K139	TEE CONNECTOR	2
55	8359K16	8359K16	8359K16	8359K16	8359K16	8359K16	NYLON TUBING 5FT.	1
56	4429K418	4429K418	4429K418	4429K418	4429K418	4429K418	BUSHING	2
57	4429K354	4429K354	4429K354	4429K354	4429K354	4429K354	CROSS	1
58	4568K191	4568K191	4568K191	4568K191	4568K191	4568K191	NIPPLE	1
59	48935K35	48935K35	48935K35	48935K35	48935K35	48935K35	VACUUM RELIEF	1
KIT	K40-MC	K40-MN	K40-ME	K40-MH	K40-MS	K40-MV	LIQUID SIDE KIT	
KIT	K45-AM						AIR MOTOR KIT	

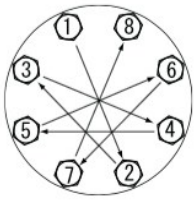

CLICK HERE FOR TORQUE

General Tools:
- Socket wrenches - 13mm, 17mm, 19mm, 24mm
- Hexagonal box wrench - 5mm, 6mm
- Small crowbars - 2 (C/N/E/V)
- Open-end wrenches - 19mm, 24mm
- Plastic hammer

Special Tools (sold separately):
- Sleeve remover (713180).

Miscellaneous:
- Nuts - M16 x 1.5
- Thread locker
- Urea grease grade (NLGI) No. 2 for Center Rod (Ref# 7)

Customer Notes

Model #: _____
Description: _____
Serial #: _____
Date Installed: _____
Department Location: _____
Tag/Project: _____

CLICK HERE FOR MAINTENANCE MANUAL

©2026 Yamada America, Inc.