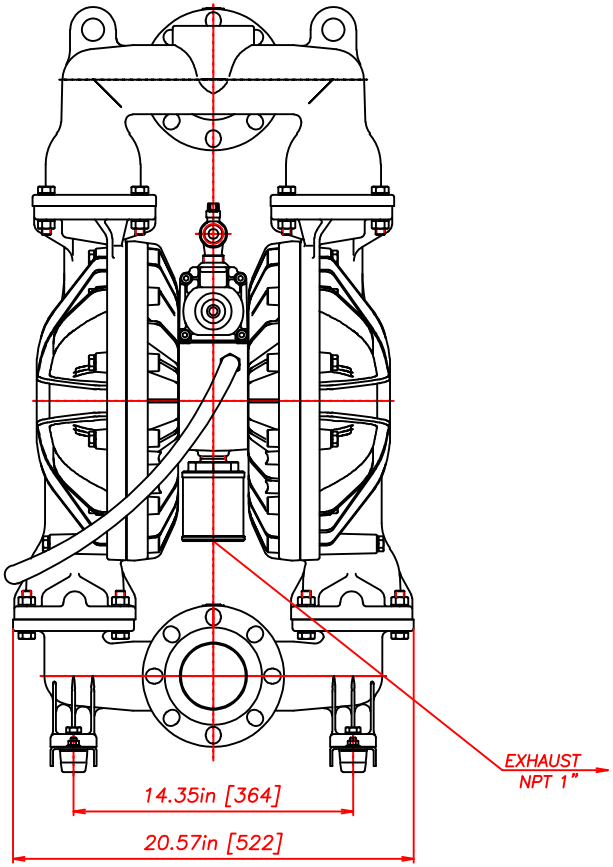


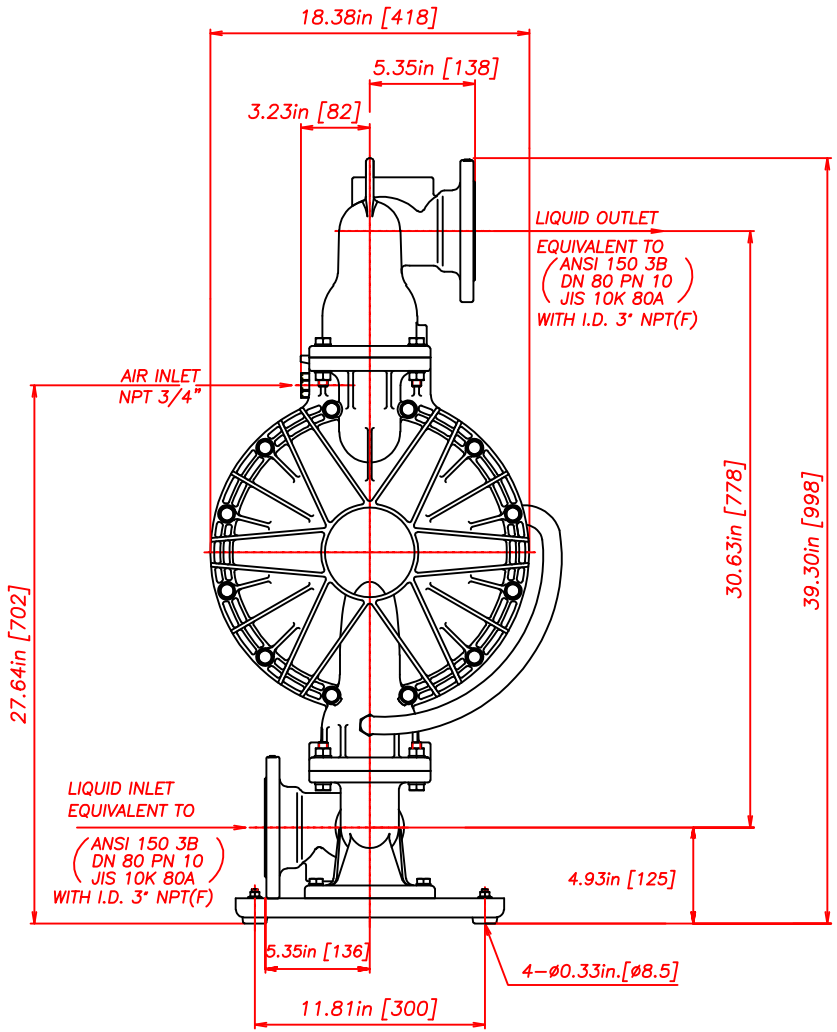


| REV | DATE | DESCRIPTION | APPR'D |
|---|---|---|---|
| | | | |

THE DWG.OF:

**DIAPHRAGM PUMP ASSEMBLY**

SCALE NTS DRAWN BY MK

DATE 12/20/24 APPROVED BY PR

THIRD ANG.PROJ.

DRAWING NUMBER: **NDP-80BA-HP**

REV 1

YAMADA AMERICA, INC.
955 EAST ALGONQUIN ROAD, ARLINGTON HEIGHTS, ILLINOIS 60005
TOLL FREE 800-990-7867 OR 847-631-9200

THIS IS A CAD DRAWING AND MUST NOT BE ALTERED MANUALLY.