EXPLODED VIEW & PARTS LISTING

Air Operated Double Diaphragm Pump

Model: NDP-40BFV
Part # 852872

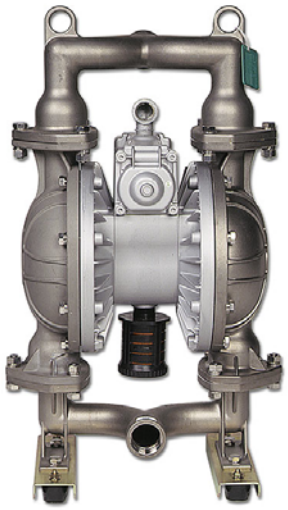

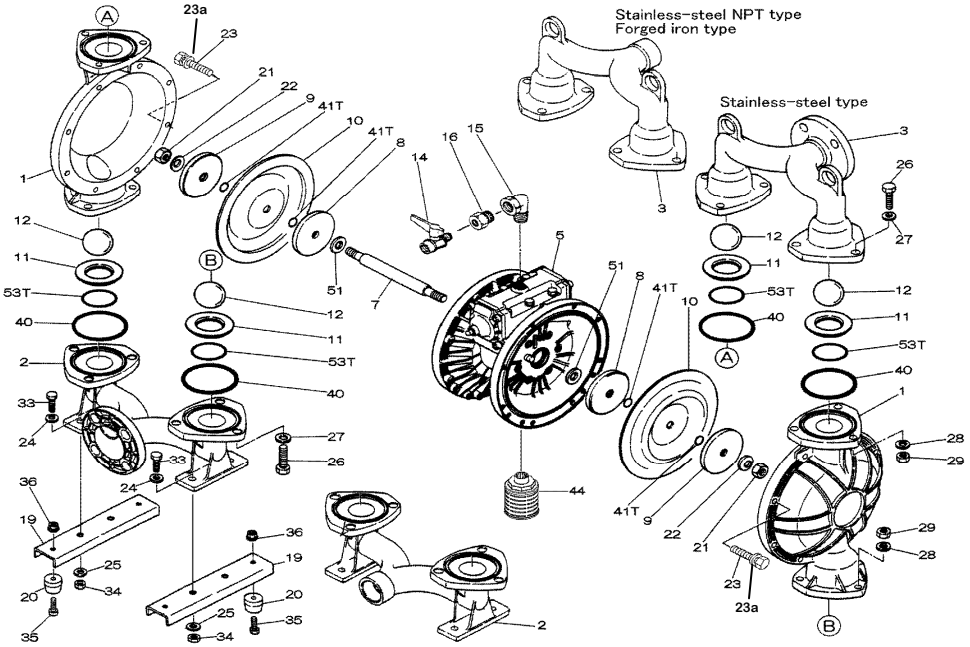

Parts List

Ref. No.	Description	Qty.	Part No.
1	Out Chamber	2	713156
2	In Manifold - NPT	1	713168
3	Out Manifold - NPT	1	713165
5	Body Assembly	1	803111
7	Center Rod	1	711900
8	Center Disk	2	711902
9	Center Disk	2	713369
10	Diaphragm	2	771799
11	Valve Seat	4	771997
12	Ball	4	770602
14	Ball Valve	1	684321
15	Elbow	1	682523
16	Bushing	1	684339
19	Pump Base	2	711911
20	Cushion	4	771402
21	Nut	2	706128
22	Coned Disk Spring	2	682740
23	Bolt	16	686160
23a	Wave Spring Washer	16	631917
24	Plain Washer	4	631014
25	Wave Spring Washer	4	631917
26	Bolt	12	611202
27	Plain Washer	12	631015
28	Spring Lock Washer	12	631918
29	Nut	12	627014
33	Bolt	4	611175
34	Nut	4	627013
35	Bolt	4	611149
36	Nut with Flange	4	682276
40	O-ring	4	642065
41T	N/A	-	-
44	Muffler	1	804764
51	Cushion	2	770582
53T	O-ring	4	643136

Repair Kits

K40-MV Liquid Side Kit includes the following:

Ref. No.	Description	Qty.	Part No.
10	Diaphragm	2	771799
11	Valve Seat	4	771997
40	O-ring	4	642065
12	Ball	4	770602

K45-AM Air Side Kit includes the following:

Ref. No.	Description	Qty.	Part No.
5-3	Throat Bearing	2	772689
5-4	Spring	2	711937
5-5	Valve Seat	2	771740
5-6	Pilot Valve Assembly	2	832162
5-8	O-ring	2	640020
5-9	Packing	2	685444
5-10	O-ring	2	640029
5-11	Gasket	2	771742
5-14	Gasket	1	771712
5-13-8	Gasket	2	771738
5-13-12	C-Spool Assy (CF)	1	805084

©2015 Yamada America, Inc.

803111 Body Assembly

Ref. No.	Description	Qty	Part No.
5-1	Air Chamber	2	711933
5-2	Body	1	711936
5-3	Throat Bearing	2	772689
5-4	Spring	2	711937
5-5	Valve Seat	2	771740
5-6	Pilot Valve Assembly	2	832162
5-8	O-ring	2	640020
5-9	Packing	2	685444
5-10	O-ring	2	640029
5-11	Gasket	2	771742
5-12	Flat Head Bolt	12	683812
5-13	Valve Body Assembly	1	802971
5-14	Gasket	1	771712
5-15	Bolt	6	684240
5-18	Plain Washer	12	684987

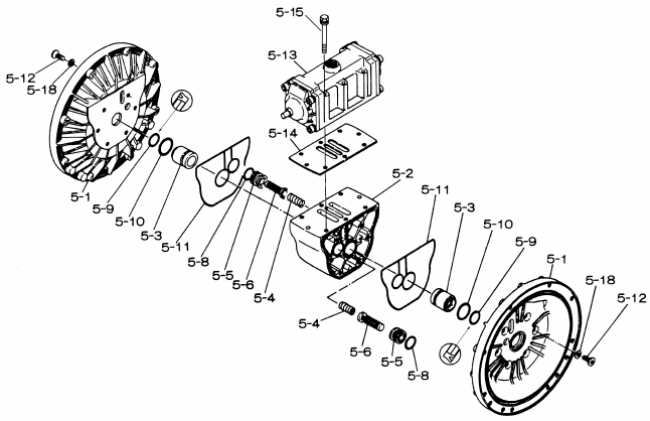

802971 Air Valve Body Assembly

Ref. No.	Description	Qty	Part No.
5-13-1	Valve Body	1	711931
5-13-2	Cap A	1	580999
5-13-3	Cap B	1	581000
5-13-5	Spring Stopper	1	771735
5-13-6	Reset Button	1	712976
5-13-8	Gasket	2	771738
5-13-9	Bolt	8	685036
5-13-12	C-Spool Assy (CF)	1	805084
5-13-12 *1 Sleeve	Sleeve Assembly	1	803675
5-13-13	O-ring	1	640005
5-13-14	Cushion	4	684128

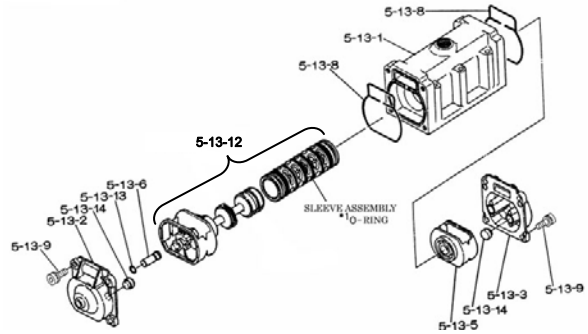

805084 C-Spool Assembly (CF)

Ref. No.	Description	Qty	Part No.
A	Sleeve Assy.	1	803675
B	O-ring (sleeve)	6	640036
C	Spool Assy (CF)	1	805085
D	Spring Retainer	1	771735
E	C-Spring	2	711932
F	Block	1	771734

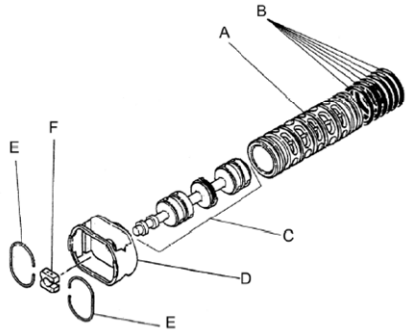

©2015 Yamada America, Inc.